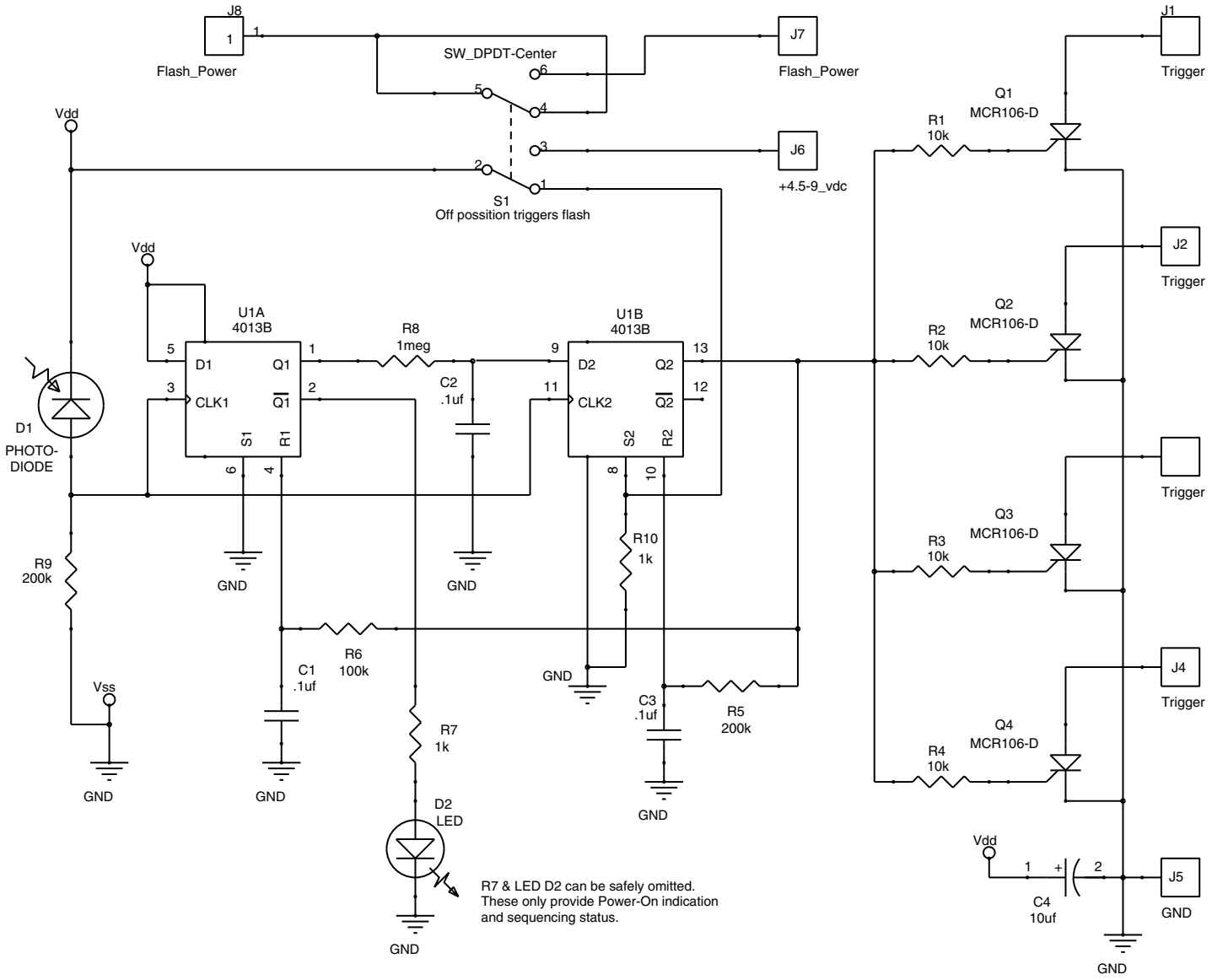

Applied Inspirations, LLC			
Title: Slave Flash 2			
Size: A	Project: SlaveFlash-3f	File: Root.sch	
Date: Nov. 11, 2008	Sheet: 1 of 1	Revision: 3.6	